MARINE PARTS & PROPULSION
mpnp.no
Exclusive Norway Distributor

POWER PARAMETERS

Generating Rates

STANDBY POWER			PRIME POWER		
360 kva	288 kW	520 A	327 kva	262 kW	472 A
Standard Voltage	400/230 VAC				
Rated at power factor Cos Ø	0,8				

1500 RPM | 50 Hz | Three phase | Water cooled | Soundproof | Diesel

Standby Rating (ESP)

According to ISO 8528-1:2005, Emergency standby power is the maximum power available during a variable electrical power sequence, under the stated operating conditions, for which a generating set is capable of delivering in the event of a utility power outageor under test conditions for up to 200h of operation per year with the maintenance intervals and procedures being carried out as prescribed by the manufacturers. The permissible average power output over 24h of operation shall not exceed 70% of the ESP.

Prime Rating (PRP)

According to ISO 8528-1:2005, Prime power is the maximum power which a generating set is capable of delivering continuously whilst supplying a variable electrical load when operated for an unlimited number of hours per year under the agreed operating conditions with the maintenance intervals and procedures being carried out as prescribed by the manufacturer. The permissible average power output (Ppp) over 24h of operation shall not exceed 70% of the PRP.

G2 class load acceptance in accordance with ISO 8528-5:2005

DIMENSION / WEIGHT / FUEL TANK

	Dimension W x L x H (mm)	Weight (kg)	Tank Capacity (lt)
Canopy	1300 x 3800 x 1850	3,044	530
Open Type	1300 x 3800 x 1750	2,565	530

NOTE: For reference only, do not use for installation design. Please contact your local dealer for exact weight and dimensions.

NOISE LEVEL db(A)	7mt@70-75db(A)

TBA: *To Be Asked*, **N/A:** *Not Applicable*

These details shown on this data sheet are intended for guidance only. FMT Group reserves the right to change the details without prior notice. The present documents will not be part of any sales contract.

FDD 360 M

POWERED BY: **DOOSAN - MARELLI**

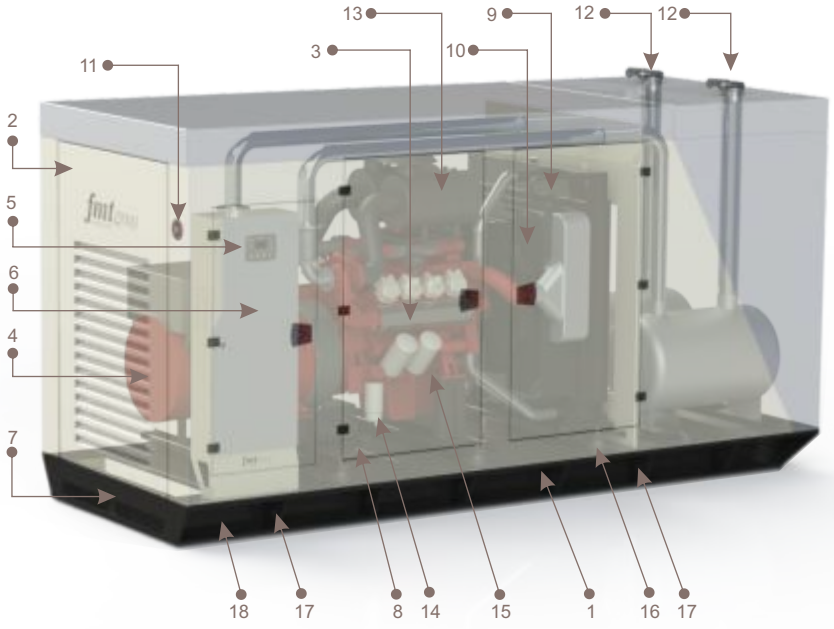

Low fuel consumption

High efficiency

Easy lift

Low noise

1	Base Frame	10	Cooling fun
2	Canopy	11	Emergency stop button
3	Engine	12	Exhaust Outlet
4	Alternator	13	Air Filter
5	Control Panel	14	Fuel filter
6	Connection Box	15	Oil Filter
7	Fuel Tank	16	Vibration Isolators
8	Battery	17	Lifting Lug
9	Radiator	18	Earthing Point

*Image for guidance purposes

FEATURES

- Galvanized steel that provides extra strength, durability and protection
- Tightly structure, excellent design
- Easy access to serviceable parts
- Double swinging doors for ease of service
- Doors have high quality gaskets to avoid leakage of sound
- LCD display shows system status and setup information
- Adequate ventilation to meet air requirement for combustion and heat removal

GENSET STANDARD SPECIFICATION

- Diesel engine
- Water cooled
- Radiator with mechanical fan
- ATS automatic transfer switch 4P
- Protective grille for rotating and hot parts
- Electric starter and charge alternator
- Engine coolant heater
- Base frame with integrated fuel tank
- Antivibration shock absorbers
- Flexible fuel connection hoses
- Single bearing, class H alternator
- Industrial exhaust silencer and steel bellows supplied separately
- Static battery charger
- Starting battery (with lead acid) including rack and cables
- Battery isolator
- Manual for application and installation

SAFETY FEATURES

- HIGH WATER TEMPERATURE
- PROTECTIVE EARTH POINT
- LOW LUBE OIL PRESSURE
- EMERGENCY STOP PUSH-BUTTON

TY...! 2 YEARS WARRANTY...! 2 YEARS WARRANTY...! 2 YE

MARINE PARTS & PROPULSION mpnp.no
Tel: **+47 56 12 30 90** email: **office@mpnp.no** web: **www.mpnp.no**
Address: **Stamsneset 100, 5252 Søreide - Bergen / Norway**

These details shown on this data sheet are intended for guidance only. FMT Group reserves the right to change the details without prior notice. The present documents will not be part of any sales contract.

HORSE POWER
Durable Energy
Unique design

The diesel engine is the most important part of the genset. Is the prime mover that drives the generator (alternator) to produce electricity. All diesel engines are similar to each other in the concept but they different in many aspects such as the number of cylinders, if the cylinders are inline or Vtype, how the fuel is delivered to the cylinders, governing system, cooling system, air charging system, air intake system. All these details affect the decision of which engine to use and which performance is expected. Engines are rated in KW or HP. Their performance is measured in their fuel consumption in filters or gallons per KWh produced, its thermal effciency, noise level, lube oil consumption and exhaust gas emissions.

ENGINE SPECIFICATION

GENERAL DATA

Model	DP126LA
No. of cylinder / Configuration	In-Line 6
Displacement	11.051 lt
Bore / Stroke	123x155 mm
Compression ratio	17.2:1
Aspiration	Turbocharged - Intercooler
Governor type	Electronic
Cooling system	Water
Coolant capacity	51 lt
Speed / Frequency	1500 rpm / 50Hz
Fuel consumption *100% power used*	68.1 lt/h
Fuel consumption *75% power used*	51.1 lt/h
Fuel consumption *50% power used*	34.3 lt/h

LUBRICATION SYSTEM

Oil capacity	44 lt

VENTILATION SYSTEM

Intake air flow	18.1 m³/min
Radiator cooling air	312 m³/min

EXHAUST SYSTEM

Exhaust outlet temperature	595 °C
Exhaust gas flow	50.7 m³/min

ELECTRICAL SYSTEM

VDC	24 V

Fuel consumption refers to prime power

These details shown on this data sheet are intended for guidance only. FMT Group reserves the right to change the details without prior notice. The present documents will not be part of any sales contract.

SELF EXCITED
STRONG ROTOR
Isolated Stator

MarelliMotori® Power Solutions since 1891

Marelli alternator has been designed for three phase and mono phase. They are brushless type and are controlled by AVR card. The windings have been industrially produced to give maximum efficiency in the production of energy. Throughout the AVR card system the output voltage is always stable. The smart AVR is a professional controller than enables the whole operation of excitement. **Marelli alternator** is protected by a special cabin that enables the electrical connections.

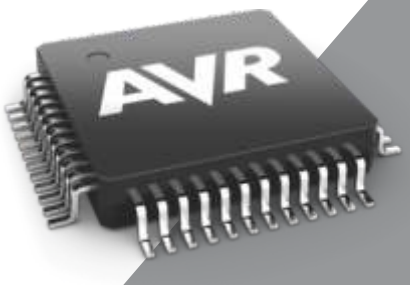

ALTERNATOR SPECIFICATION

GENERAL DATA

Model	MJB 315 SB4
No. of Phase	3
Power Factor	0.8
No of Bearing	SINGLE
No of Poles	4
No of Leads	12
Insulations Class	H
Voltage Regulation (Steady State)	± 1%
Degree of Protection	IP 23
Excitation System	Self excited, AVR, Brushless
Connection System	STAR
Frequency	50 Hz
Voltage Output	400/230 VAC
Rated Power (standby)	360 kVA
Efficiency	93.4 %

Alternator Structure

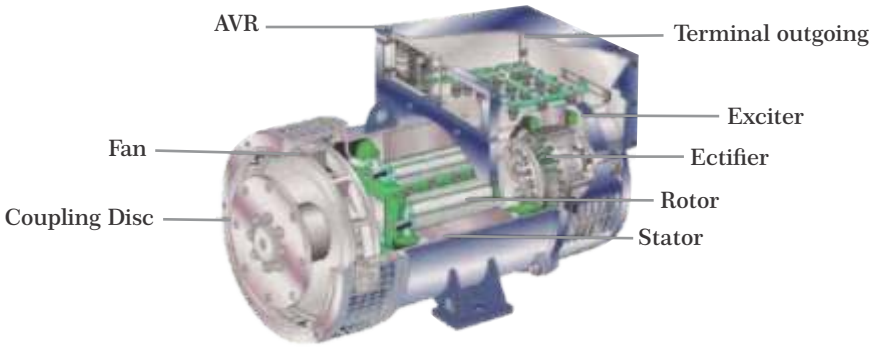

These details shown on this data sheet are intended for guidance only. FMT Group reserves the right to change the details without prior notice. The present documents will not be part of any sales contract.

SINGLE GEN-SET
AMF AUTOMATIC MAINS FAILURE

control panel

fmt control panel — STANDARD

GENA
3P5-V400-GENA

GENA is a next generation genset controller combining multi-functionality and wide communication capabilities together with a reliable and low-cost design. The same controller provides synchronization, load share, AMF, ATS, Remote Start, Engine Control and Remote Display Panel functionalities. The module comes ready for remote monitoring over GSM or Ethernet with plug-in communication modules. Various plug-in modules provide unlimited expansion capabilities allowing to meet any special requirement. The unit complies and mostly exceeds world's tightest safety, vibration and environmental standards for the industrial category. Software features are complete with easy firmware upgrade process through USB port. The Windows based PC software allows monitoring and programming through USB, RS-485, Ethernet and GPRS.
The Rainbow Scada web monitoring service allows monitoring and control of an unlimited number of gensets through any web browser.

DOWNLOAD datasheet

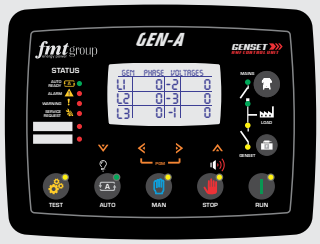

ComAp — OPTIONAL

InteliLiteNT AMF9
3P5-V400-CA9

The InteliLiteNT AMF 9 is integrated controller for gen-sets operating in single standby mode. The controller meets all requirements for Auto Mains Failure (AMF) applications including remote communication and internet control, user confi guration and complete gen-set monitoring and protection. InteliLiteNT AMF 9 is easy to use with a simple intuitive user interface and graphic display. Unit is designed for quick and cost saving commissioning and bring seamless integration with the latest breed of EFI diesel engines from all major manufacturers. This offers a higher level of functionality with users able to display a comprehensive range of values from the EFI engine on standard analog gauges and true RMS measurement of electric values.

DOWNLOAD datasheet

InteliLite AMF25
3P5-V400-CA25

InteliLite® AMF 25 is new integrated controller for gen-sets operating in single standby mode. It meet all possible requirements for AMF applications, including modem control, user configuration and full gen-set monitoring and protection.InteliLite® controllers are equipped with a powerful graphic display. Icons, symbols and bar graphs for intuitive operation together with high functionality set new standards in gen-set control. Special low temperature (IL-AMF 20-LT or IL-AMF 25-LT) version is also available, allowing the display to work up to -30 °C.

DOWNLOAD datasheet

DSE — OPTIONAL

DSE6120
3P5-V400-DSE6120

The DSE6120 is an Auto Mains (Utility) Failure Control Module suitable for a wide variety of single gen-set applications. Monitoring speed, frequency, voltage, current, oil pressure, coolant temperature and fuel level, the modules will display warnings, shutdown and engine status information on the back-lit LCD screen and illuminated LED. Both modules offer electronic (CAN) and non-electronic (magnetic pick-up/alternator sensing) engine versions and offer a number of flexible inputs, outputs and engine protections so the system can be easily adapted to suit a wide range of application demands. The modules can be easily configured using the DSE Configuration Suite PC software. Selected front panel editing is also available.

DOWNLOAD datasheet

DSE7320
3P5-V400-DSE7320

The DSE7320 is an Auto Mains (Utility) Failure Control Module suitable for a wide variety of single, diesel or gas, gen-set applications. Monitoring an extensive number of engine parameters, the modules will display warnings, shutdown and engine status information on the back-lit LCD screen, illuminated LEDs, remote PC and via SMS text alerts (with external modem). The DSE7320 will also monitor the mains (utility) supply. The modules include USB, RS232 and Rs485 ports as well as dedicated DSENet® terminals for system expansion. Is compatible with electronic (CAN) and non-electronic (magnetic pick-up/alternator sensing) engines and offer an extensive number of flexible inputs, outputs and extensive engine protections so the system can be easily adapted to meet the most demanding industry requirements.

DOWNLOAD datasheet

These details shown on this data sheet are intended for guidance only. FMT Group reserves the right to change the details without prior notice. The present documents will not be part of any sales contract.

SYNCHRONIZE SYSTEM

AMF AUTOMATIC MAINS FAILURE

control panel

fmt control panel — STANDARD

GENA-SYC

3P5-V400-GENA

GENA is a next generation genset controller combining multi-functionality and wide communication capabilities together with a reliable and low-cost design. The same controller provides synchronization, load share, AMF, ATS, Remote Start, Engine Control and Remote Display Panel functionalities. The module comes ready for remote monitoring over GSM or Ethernet with plug-in communication modules. Various plug-in modules provide unlimited expansion capabilities allowing to meet any special requirement. The unit complies and mostly exceeds world's tightest safety, vibration and environmental standards for the industrial category. Software features are complete with easy firmware upgrade process through USB port. The Windows based PC software allows monitoring and programming through USB, RS-485, Ethernet and GPRS.

The Rainbow Scada web monitoring service allows monitoring and control of an unlimited number of gensets through any web browser.

DOWNLOAD datasheet

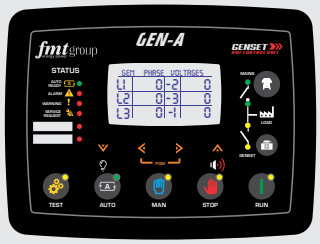

fmt control panel — OPTIONAL

FSYNCH-7

3P5-V400-FSYNCH-7

The FSYNCH-7 is a next generation synchronizing genset controller combining multi-functionality and wide communication capabilities together with a reliable and low cost design. The unit offers auto-genset learning capability, a first in the industry. The multi-functionality of the unit allows it to be a genset or mains synchronizer, even a parallel to mains controller with soft transfer in both directions. The unit is available with 4.3"TFT color display or 128x64 pixels B/W display. The unit complies and mostly exceeds world's tightest safety, EMC, vibration and environmental standards for the industrial category. Software features are complete with easy firmware upgrade process through USB port. The Windows based PC software allows monitoring and programming through USB, RS-485, Ethernet and GPRS. Scada web monitoring service allows monitoring and control of an unlimited number of gensets through any web browser.

DOWNLOAD datasheet

ComAp — OPTIONAL

InteliGen 200

3P5-V400-CI200

The new ComAp InteliGen 200 introduces a new era in parallel genset control. The power and reliability of InteliGen, combined with the design and flexibility of the InteliLite gives you the best paralleling controller ComAp have ever made. The InteliGen 200 allows you to choose the configuration that best suits your application. Add more inputs and outputs, add GPS or 4G/LTE communications – it's up to you. Configuration and monitoring is supported by InteliConfig – a new version of ComAp's PC software offering the possibility to control and monitor either one, or multiple gen-sets. Thanks to manuals incorporated directly into InteliConfig and a context sensitive hint feature, customers have always help at hand.

DOWNLOAD datasheet

DSE — OPTIONAL

DSE8610

3P5-V400-DSE8610

The DSE8610 MKII is a marketleading Synchronising Auto Start Control Module suitable for use in a multi-generator loadshare system, designed to synchronise up to 32 generators including electronic and non-electronic engines. The DSE8610 MKII monitors the generator and indicates operational status and fault conditions, automatically starting or stopping the engine on load demand or fault conditions. System alarms are annunciated on the LCD screen (multiple language options available), illuminated LED and audible sounder. The event log records 250 events to facilitate easy maintenance, and an extensive number of fixed and flexible monitoring, metering and protection features are included.

DOWNLOAD datasheet

SMART LOGIC
SUPER CONTROL
FULL PROTECTION

These details shown on this data sheet are intended for guidance only. FMT Group reserves the right to change the details without prior notice. The present documents will not be part of any sales contract.

HIGH TECHNOLOGY
FOR EVERYONE

GEN-A

- BOTH AMF AND SYNCHRONIZING
- SAME UNIT FOR ALL FUNCTIONS
- INTERNET BASED
- MULTI–PROTOCOL
- FLEXIBLE WITH PLUG–IN MODULES
- AUTO LEARNING

BUTTON	FUNCTION DESCRIPTION GENSET AMF CONTROL UNIT GEN-A
	Selects TEST mode *The genset runs and takes the load*
	Selects MANUAL mode *The RUN push button is enabled.* *The genset will run when RUN mode is selected.* *It can be stopped anytime by depressing the OFF button*
	Selects RUN mode Runs the genset off load. Applicable only in MANUAL mode
	Selects AUTO mode The genset runs when necessary and takes the load
	Selects OFF mode The genset stops after cooldown. If depressed again, the genset will immediately stop
	Selects next display screen in the same display group LAMP TEST when held pressed
	Selects previous display group
	Selects next display group
	Selects previous display screen in the same display group Resets the ALARM RELAY
	Manual MAINS CONTACTOR (or Busbar contactor) control in RUN mode
	Manual GENSET CONTACTOR (or Busbar contactor) control in RUN mode
	When held pressed for 5 seconds, enters PROGRAMMING mode
	Makes factory reset. Please review chapter RESETTING TO FACTORY DEFAULTS for more details.
	When held pressed for 5 seconds, resets service request counters. Please review chapter SERVICE REQUEST ALARM for more details

FEATURES

- Diesel and gas genset support
- 400Hz operation support
- 400 event logs, full snapshot
- All parameters front panel editable
- 3 level configuration password
- 128x64 graphical LCD display
- Downloadable languages
- Waveform display of V & I
- Harmonic analysis of V & I
- Synchroscope & check synch
- Allows closed transfers
- 16Amp MCB & GCB outputs
- 8 configurable digital inputs
- Inputs expandable to 40
- 8 configurable digital outputs
- Outputs expandable to 40
- 7 configurable analog inputs
- Both CANBUS-J1939 & MPU
- 3 configurable service alarms
- Multiple topologies
- 6xCT, true mains metering
- Supports up to 48 gensets
- Automatic learning/self adjust
- Direct governor & AVR control
- Voltage and phase matching
- kW & kVAr load sharing
- True soft transfer in both ways
- PLC functions
- Peak Lopping / peak shaving
- Mains de-coupling protection
- R.O.C.O.F protection
- Vector shift protection
- Reverse power protection
- Over/under freq. Protection
- Over/under voltage protection
- Smart load management
- Smart genset sequencing
- Run/stop priority support
- Equal aging of gensets
- Base load (power export)
- Unmanaged distributed power export support
- AVR & GOV droop support
- Dead bus sensing
- Multiple automatic exerciser
- Weekly operation schedule
- Dual mutual standby with equal aging of gensets
- Manual “speed fine adjust” on selected ECUs
- Automatic fuel pump control
- Disable protections feature
- Excess power protection
- Reverse power protection
- Overload IDMT protection
- Load shedding, dummy load
- Multiple load management
- Current unbalance protection
- Voltage unbalance protection
- Fuel filling & fuel theft alarms
- Contactor & MCB drive
- Battery back-up real time clock
- Idle speed control
- Battery charge run enabled
- Combat mode support
- Multiple nominal conditions
- 4 quadrant genset power counters
- Mains power counters
- Fuel filling counter
- Fuel consumption counter
- Modem & ethernet diagnostics
- Configurable through USB, RS-485, Ethernet and GPRS
- Free configuration program
- Allows SMS controls
- Ready for central monitoring ethernet & GPRS
- Mobile genset support
- Automatic GSM geo-location
- GPS connectivity (USB&RS232)
- Dynamic DNS support
- Easy USB firmware upgrade
- IP65 rating with standard gasket

These details shown on this data sheet are intended for guidance only. FMT Group reserves the right to change the details without prior notice. The present documents will not be part of any sales contract.

PLUG-IN MODULES

- 2G GSM Modem
- 3G GSM Modem
- 4G GSM Mode
- Wi-Fi (802.11 b/g/n)
- Ethernet 10/100 Mbits
- USB Host
- RS-232 (isolated)
- RS-485 (isolated)
- Synchro/LoadShare Module
- 3x AC Current Inputs
- 3x Analog Inputs

FUNCTIONALITIES

- Multi genset synch & load share
- Single genset parallel with mains
- AMF unit (uninterrupted transfer)
- ATS unit (uninterrupted transfer)
- Remote start controller
- Manual start controller
- Engine controller
- Remote display panel

COMMUNICATIONS

- Central Monitoring
- Embedded Web Server
- USB
- GPS (geo-location)
- SMS
- E-mail
- Modbus
- Modbus TCP/IP
- SNMP 1.0 with trap
- HTML
- UDP
- SNTP

Backpanel view

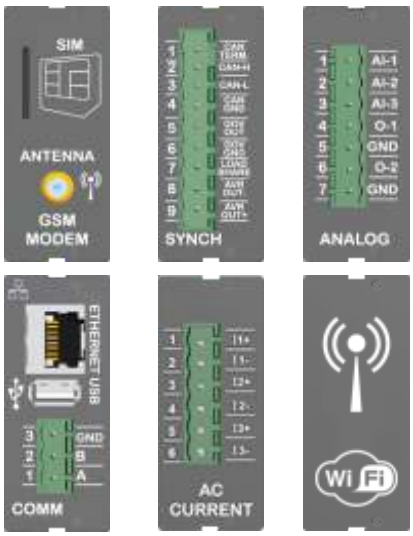

Plug-in modules

MULTI GENSET SYNCHRONIZATION

Up to 48 gensets may be paralleled on the same busbar. Smart load management is a standard feature.

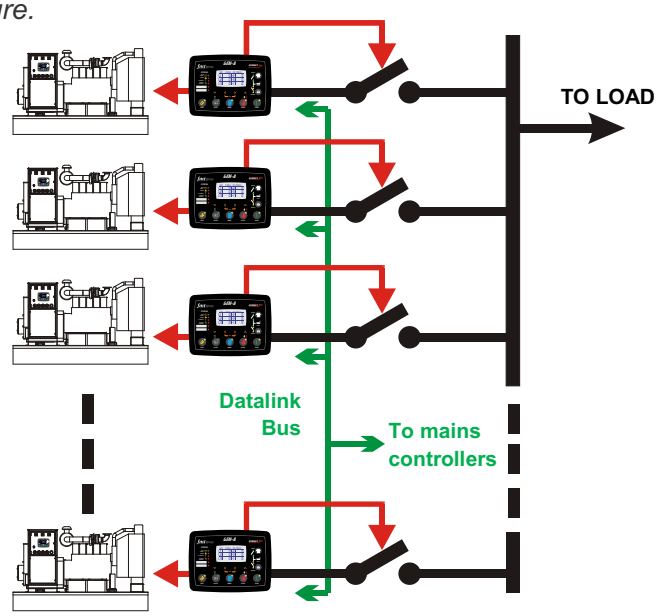

MAINS SYNCHRONIZATION

Up to 16 mains controller per system are supported . Mains controllers provide the REMOTE START signal and handle synchronization of the complete genset system with mains.

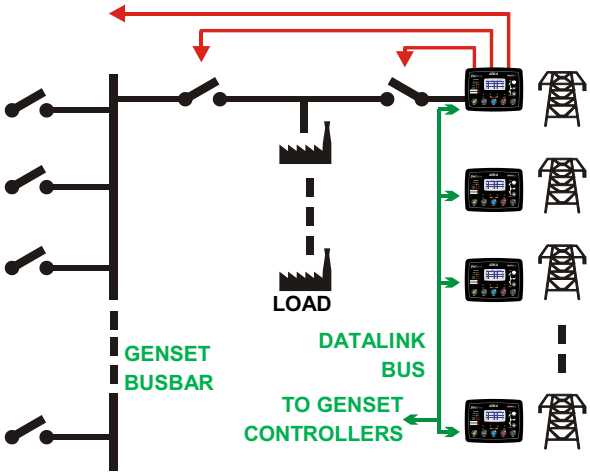

These details shown on this data sheet are intended for guidance only. FMT Group reserves the right to change the details without prior notice. The present documents will not be part of any sales contract.

TECHNICAL SPECIFICATIONS

Alternator voltage: 0 to 300 V-AC (Ph-N)
Alternator frequency: 0-600 Hz.
Mains voltage: 0 to 300 V-AC (Ph-N)
Mains frequency: 0-600 Hz.
Topology: 1-2-3 phases, with or without neutral
DC Supply Range: 8.0 to 36.0 V-DC.
V-A-cos Accuracy: 0.5% + 1 digit
kW-kVA-kVAr Accuracy: 1.0% + 1 digit
Current consumption: 500 mA-DC max.
Current Inputs: from current transformers. ../5A or ../1A.
Digital inputs: input voltage 0 to 36 V-DC.
Analog input range: 0-5000 ohms.
Mains and genset contactor outputs: 16Amps@250V
DC Outputs: Protected mosfet semiconductor outputs, rated 1Amp@28V-DC
Cranking dropouts: survives 0V for 100ms.
Magnetic pickup voltage: 0.5 to 50Vpk.
Magnetic pickup frequency: 0 to 20000 Hz.
Charge Alternator Excitation: 2W.
Display Screen: 2.9", 128x64 pixels
Ethernet Port: 10/100 Mbits
USB Device: USB 2.0 Full speed
USB Host: USB 2.0 Full speed
RS-485 Port: selectable baud rate (2400-115200baud)
RS-232 Port: selectable baud rate (2400-115200baud)
Operating temperature: -20°C to 70°C (-4 to +158 °F)
Storage temperature: -40°C to 80°C (-40 to +176°F)
Maximum humidity: 95% non-condensing.
IP Protection: IP65 from front panel, IP30 from the rear (with gasket)
Dimensions: 211 x 162 x 42mm (WxHxD)
Panel Cut-out Dimensions: 176 x 121 mm minimum.
Weight: 500 g (approx.)
Case Material: High Temperature, non-flammable ABS/PC
Installation: Flat surface mounting on a Type 1 enclosure. Rear retaining plastic brackets.

TYPICAL CONNECTIONS

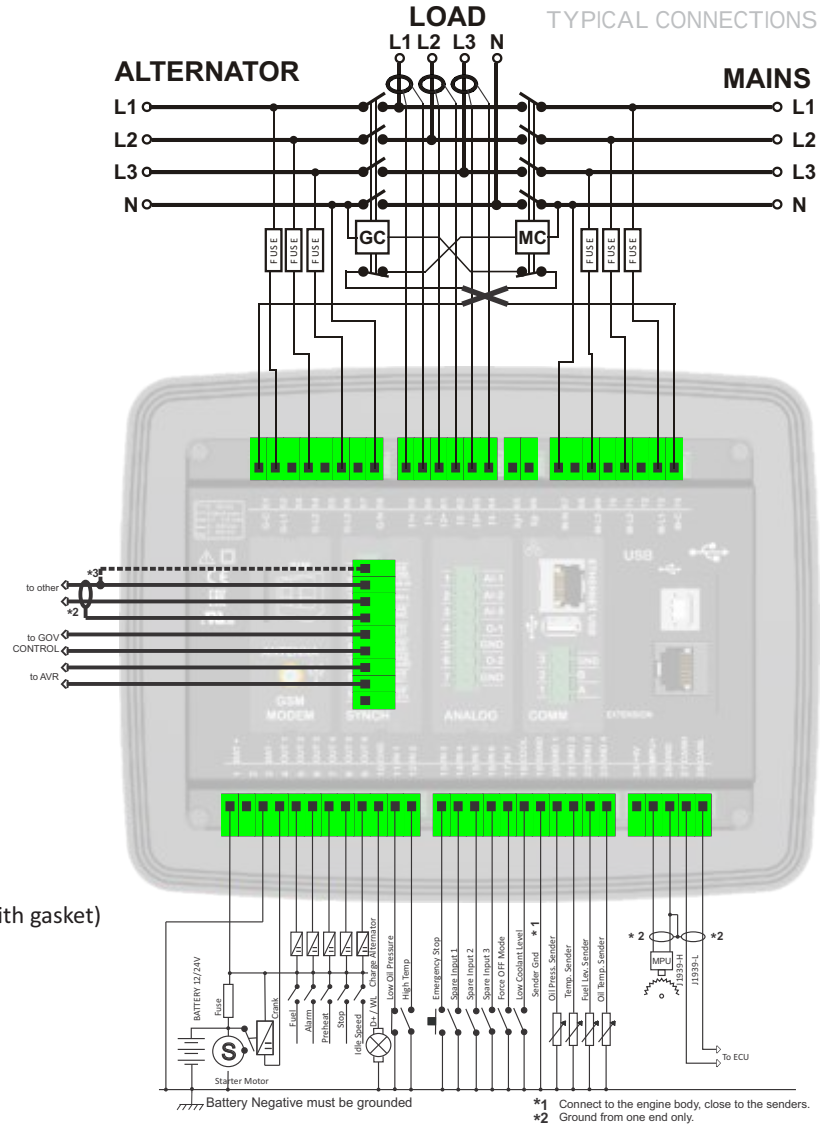

CONFORMITY

EU Directives Conformity
-2014/35/EC (low voltage)
-2014/30/EC (electro-magnetic compatibility)

Norms of reference:
EN 61010 (safety requirements)
EN 61326 (EMC requirements)

UL & CSA Compatibility:
- UL 6200, Controls for Stationary Engine Driven Assemblies (File# - 20140725-E314374)
- CAN/CSA C22.2 No. 14-13 – Industrial Control Equipment

SCOPEMETER & HARMONICS

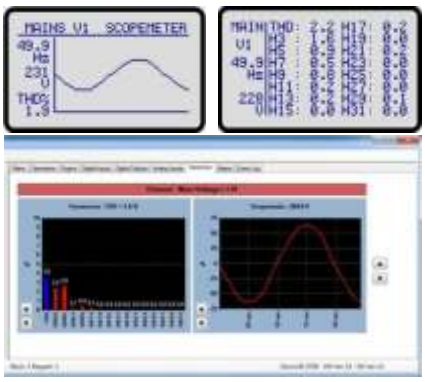

RAINBOW SCADA CENTRAL MONITORING

WEB SERVER

These details shown on this data sheet are intended for guidance only. FMT Group reserves the right to change the details without prior notice. The present documents will not be part of any sales contract.

fmt eletric ats system

AUTOMATIC TRANSFER SWITCHES

An ATS is a device that interfaces with a generator and the yours electrical system. It monitors the utility power and signals the generator to start if the utility power goes out of spec or drops out entirely (blackout). Backup power is now fed to the main utility panel or an emergency panel via the ATS. All FMT group generators has the ATS system.

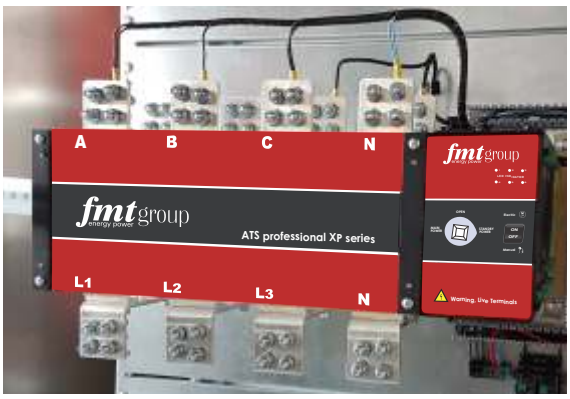

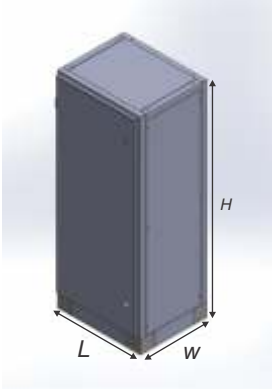

VOLTAGE	MODEL CONFIGURATION	ATS PANEL MODEL	CAPACITY AMPS	Dimension (mm) W x L x H
400/230 VAC	3P5-V400-GENA	ATSXP 630A 4P	630A 4P	500 x 600 x 1500

OPTINAL

PRO-ACB Series

AIR CIRCUIT BREAKER

FMT PRO-ACB Series intelligent type universal circuit breaker is suitable for AC50HZ, rated voltage up to 660V(690) and below, rated current 400A-6300A of the distribution network used to distribute power and protect circuits and power supply equipment against overload, under-voltage, short circuit, single-phase ground fault. Circuit breaker protection with intelligent, selective protection of precision, improve the reliability of power supply, avoid unnecessary power outages. At the same time with an open communication interface for four remote, meet the requirements of the system centers and automation systems. The circuit breaker at an altitude of 2000 meters pulse pressure 8000V (different altitude correction according to the standard, no more than 12000V). The circuit breaker without in Intelligent Release and sensor can be used for isolation, mask as Circuit Breaker meets the requirement specified in GB14048.2 ”low-voltage switchgear and control equipment low-voltage circuit breakers” and IEC947-2 “low-voltage switchgear and control equipment circuit breaker”.

*Image for guidance purposes

note:

- *All information given in this data sheet is intended for guidance only*
- *Producing with ISO9001, ISO14001, OHSAS18001, CE standards*
- *FMT GROUP reserves the right to change the details without prior notice*
- ***TBA:** To Be Asked, **N/A:** Not Applicable*

These details shown on this data sheet are intended for guidance only. FMT Group reserves the right to change the details without prior notice. The present documents will not be part of any sales contract.

fmt group
energy power

Exclusive Norway Distributor

MARINE PARTS & PROPULSION

mpnp.no

Tel: **+47 56 12 30 90**
email: **office@mpnp.no**
web: **www.mpnp.no**
Address: **Stamsneset 100, 5252 Søreide - Bergen / Norway**